E+E

your partner
in sensor
technology.

Datasheet
EE310 UL Listed

High-End Humidity and Temperature Sensor for Industrial Applications

C UL US
LISTED

Modbus

www.epluse.com

EE310-UL

High-End Humidity and Temperature Sensor for Industrial Applications

The UL listed EE310 is optimized for best reliability in industrial applications up to 180 °C (356 °F) and 20 bar (290 psi). In addition to highly accurate measurement of the relative humidity (RH) and temperature (T), the device calculates all other humidity related parameters.

Measurement Performance

The EE310 employs high-end E+E humidity sensing elements manufactured in state-of-the-art thin film technology, which are the prerequisite for outstanding measurement accuracy.

Long-Term Stability

The E+E proprietary coating protects the sensing elements against corrosive and electrically conductive pollution, which leads to outstanding long-term stability even in harsh environment. With the selection of the appropriate filter cap, the EE310 tackles even challenging industrial applications.

Versatility

The EE310 is available for wall or duct mount as well as with remote probe. It features an UL Type 4 polycarbonate enclosure which facilitates installation and maintenance. The enclosure can accommodate a 100 - 240 VAC supply unit or various interface modules.

Outputs

The measured data is available on two analogue outputs and on the RS485 (Modbus RTU) interface.

Configurable and Adjustable

The configuration and the RH and T adjustment of the EE310 can be performed either using the display and the push buttons or with the free E+E PCS10 Product Configuration Software via the USB interface.

Polycarbonate enclosure for wall mounting

Polycarbonate enclosure for duct mounting

EE310- with remote probe

Features

Enclosure

- UL Type 4 protection rating
- Easy mounting and service
- Screws secured in cover

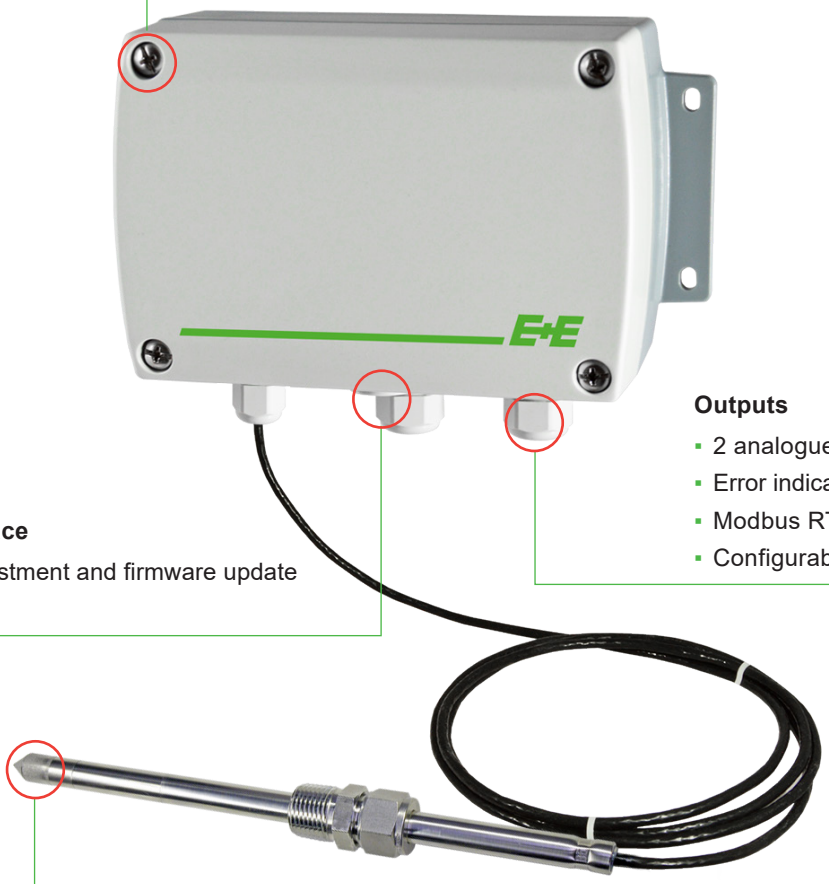

Outputs

- 2 analogue outputs current / voltage
- Error indication according to NAMUR
- Modbus RTU
- Configurable via software

USB service interface

- Configuration, adjustment and firmware update
- 4 status LEDs

Probe

- Working range up to +180 °C (+356 °F) and 20 bar (290 psi)
- Protective coating for sensing elements

Inspection certificate

According to DIN EN 10204-3.1

Features

Protective Sensor Coating

The E+E proprietary sensor coating is a protective layer applied to the sensing elements, their leads and soldering points. The coating substantially extends sensor lifetime and ensures optimal measurement performance in corrosive environment (salts, off-shore applications). Additionally, it improves the sensors' long term stability in dusty, dirty or oily applications by preventing stray impedance caused by deposits on the active sensor surface or on the electrical connections.

Dimensions

Values in mm (inch)

Enclosure

Polycarbonate

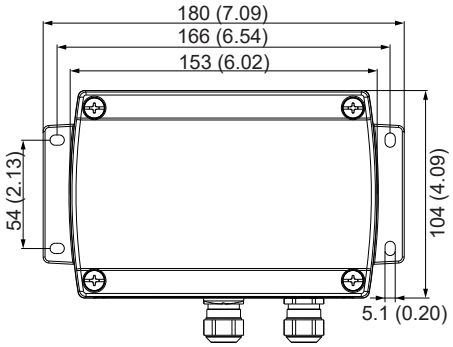

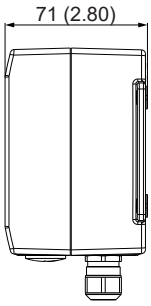

Type

T1: Wall mount

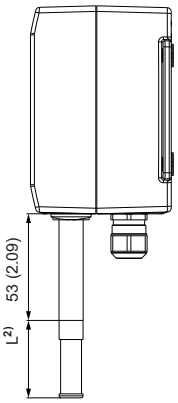

T2: Duct mount

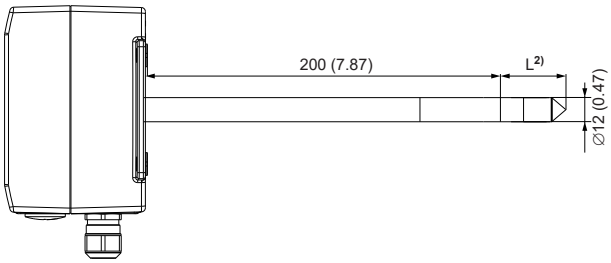

Type

T5: Remote probe up to 180 °C (356 °F)

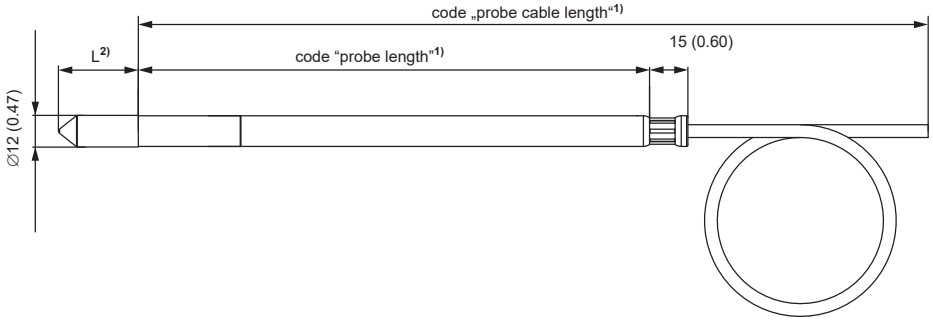

Type

T10: Pressure tight probe up to 20 bar (300 psi)

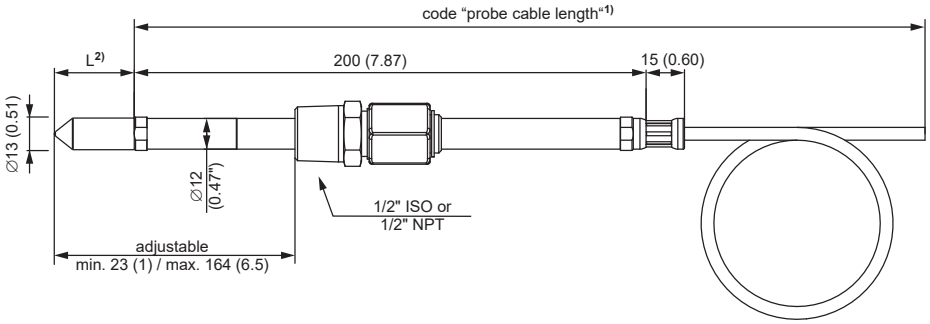

1) Refer to ordering guide
2) L = filter length; refer to data sheet Accessories

Technical Data

Measurands

Relative Humidity (RH)

Measuring range	0...100 %RH
Accuracy[1)] incl. hysteresis, non-linearity and repeatability **-15...+40 °C (5...104 °F), RH ≤90 %** **-15...+40 °C (5...104 °F), RH >90 %** **-25...+70 °C (-13...+158 °F)** **-40...+180 °C (-40...+356 °F)**	 ± (1.3 + 0.3 % * mv) %RH ± 2.3 %RH ± (1.4 + 1 % * mv) %RH ± (1.5 + 1.5 % * mv) %RH mv = measured value
Temperature dependence of electronics, typ.	±0.01 % RH / °C (0.0055 %RH / °F)
Response time t_{90} with metal grid filter at 20 °C (68 °F)	<15 s

1) Traceable to international standards, administrated by NIST, PTB, BEV,...
The accuracy statement includes the uncertainty of the factory calibration with an enhancement factor k=2 (2-times standard deviation).
The accuracy was calculated in accordance with EA-4/02 and with regard to GUM (Guide to the Expression of Uncertainty in Measurement).

Temperature (T)

Measuring range	
T1, wall mount	-40...+60 °C (-40...+140 °F)
T2, duct mount	-40...+80 °C (-40...+176 °F)
T5, remote probe	-40...+180 °C (-40...+356 °F)
T10, pressure tight probe	-40...+180 °C (-40...+356 °F)
Accuracy[1)]	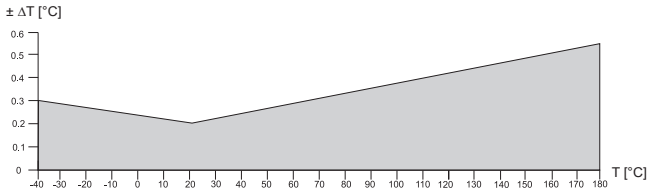
Temperature dependence of electronics, typ.	±0,005 °C / °C

1) Traceable to international standards, administrated by NIST, PTB, BEV,...
The accuracy statement includes the uncertainty of the factory calibration with an enhancement factor k=2 (2-times standard deviation).
The accuracy was calculated in accordance with EA-4/02 and with regard to GUM (Guide to the Expression of Uncertainty in Measurement).

Calculated Quantities

		from		up to						unit	
				EE310-T1		**EE310-T2**		**EE310-T5, T10**			
Dew point temperature	Td	-40	(-40)	60	(140)	80	(176)	100	(212)	°C	(°F)
Frost point temperature	Tf	-40	(-40)	0	(32)	0	(32)	0	(32)	°C	(°F)
Wet bulb temperature	Tw	0	(32)	60	(140)	80	(176)	100	(212)	°C	(°F)
Water vapour partial pressure	e	0	(0)	200	(3)	500	(7.5)	1100	(15)	mbar	(psi)
Mixing ratio	r	0	(0)	425	(2900)	999	(9999)	999	(9999)	g/kg	(gr/lb)
Absolute humidity	dv	0	(0)	150	(60)	300	(120)	700	(300)	g/m^3	(gr/ft^3)
Specific enthalpy	h	0	(0)	400	(180)	1000	(450)	2800	(1250)	kJ/kg	(BTU/lb)

Technical Data

Outputs

Analogue

Two analogue outputs freely selectable and scalable	0 - 1 / 5 / 10 V		-1 mA < I_L < 1 mA	I_L = load current
	4 - 20 mA	3-wire	R_L < 500 Ω	R_L = load resistance
	0 - 20 mA	3-wire	R_L < 500 Ω	

Digital

Digital interface	RS485 (EE310-UL = 1 unit load)
Protocol	Modbus RTU
Factory settings	9 600 Baud, parity even, 1 stop bit, Modbus address 231
Supported Baud rates	9 600, 19 200, 38 400, 57 600 and 76 800

General

Power supply	**Input voltage range**	**Power requirments**	**Conductor temperature rating**
	8 - 35 V DC (LPS)	max. 2 W*)	min. 75 °C (167 °F)
	Indoor use: 12 - 30 V AC, 50/60 Hz (Class 2 supply) Outdoor use: 12 - 16 V AC, 50/60 Hz (Class 2 supply)	max. 4 VA*)	min. 75 °C (167 °F)
	100 - 240 V AC, 50/60 Hz[1)]	max. 5 VA*)	min. 75 °C (167 °F)
	*) Including 2 voltage or current outputs		
Electrical connection	Screw terminals max. 1.5 mm^2 (AWG 16)		
Pressure working range with pressure-tight probe	0.01...20 bar (0.15...300 psi)		
Temperature working range **Electronics** **Remote sensing probe cable**	 -40...+60 °C (-40...+140 °F) -40...+150 °C (-40...+302 °F)		
Storage condition	-40...+60 °C (-40...+140 °F)		
Material **Probe** **Enclosure**	Stainless steel 1.4404 (AISI 316L) PC (Polycarbonate), UL94-V0 approved		
Protection rating	IP65[2)], UL Type 4		
Electromagnetic compatibility	EN 61326-1 EN 61326-2-3 Industrial environment FCC Part15 Class A ICES-003 Class A		
Compliance	c UL us LISTED **United States:** UL Listed, CCN QUYX, Under UL 61010-1, Process Control Equipment; FCC Compliant to CFR47, Part 15, Subpart B, Class A **Canada:** UL Listed, CCN QUYX7, Under CSA C22.2 No. 61010-1, Signal Equipment; Industry Canada Compliant, ICES-003		
Configuration software	E+E PCS10 Product Configuration Software Free download from www.epluse.com/configurator		

1) Degree of pollution 2, overvoltage category II, altitude up to 3000 m (9843 ft).
2) IP65 not evaluated by UL.

Ordering Guide

	Feature	Description	Code			
			EE310-AP1			
Hardware Configuration	**Type**	Wall mount	T1			
		Duct mount		T2		
		Remote probe up to 180 °C (356 °F)			T5	
		Pressure tight probe up to 20 bar (300 psi)				T10
	Filter	Stainless steel sintered	No code	No code	No code	No code
		Polytetrafluoroethylene (PTFE)	F5	F5	F5	
		Stainless steel - metal grid (up to 180 °C / 356 °F)	F9	F9	F9	F9
	Probe cable length (incl. probe length)	2 m (6.6 ft)			No code	No code
		5 m (16.4 ft)			K5	K5
		10 m (32.8 ft)			K10	K10
		20 m (65.6 ft)			K20	K20
	Probe length	65 mm (2.55")			L65	
		200 mm (7.84")			No code	No code
		400 mm (15.75")			L400	L400
	Process connection	G1/2" ISO - sliding fitting, Ø13 mm (0.51")				PA23
		1/2" NPT - sliding fitting, Ø13 mm (0.51")				PA25
	Electrical connection	Standard[1)]	No code			
		1 x plug for power supply and outputs[2)]	E4			
		2 x plugs for power supply + outputs and for RS485 (requires option J3)[2)]	E6			
	Optional features	RS485 module - Modbus RTU	J3			
		E+E proprietary coating	C1			
		Integrated power supply 100 - 240 V AC, 50/60 Hz for NFPA79 applications[3)]	AM3			
Setup Analogue Outputs	**Output 1 measurand**	Relative humidity RH [%]	No code			
		Other measurands (*xx* see measurand code)	MA*xx*			
	Output 1 signal[5)]	0 - 1 V	GA1			
		0 - 5 V	GA2			
		0 - 10 V	GA3			
		0 - 20 mA	GA5			
		4 - 20 mA	GA6			
	Output 1 scaling low	0	No code			
		Value	SAL*Value*			
	Output 1 scaling high	100	No code			
		Value	SAH*Value*			
	Output 2 measurand	Temperature T [°C]	No code			
		Temperature T [°F]	MB2			
		Other measurands (*xx* see measurand code)	MB*xx*			
	Output 2 signal[4)]	0 - 1 V	GB1			
		0 - 5 V	GB2			
		0 - 10 V	GB3			
		0 - 20 mA	GB5			
		4 - 20 mA	GB6			
	Output 2 scaling low	Value	SBL*Value*			
	Output 2 scaling high	Value	SBH*Value*			

1) Standard = 2 x M16 cable glands, except for AM3 option: 2 plugs for power supply and outputs.
2) For indoor use only.
3) With electrical connection standard only (no other plug options possible) and for NFPA79 applications only, NFPA = National Fire Protection Association
4) Both analogue outputs must be either voltage or current

Measurand Code

For Output 1 and 2 in the Ordering Guide

Measurand		Unit	Code
			MAxx / MBxx
Relative humidity		%	10
Temperature		°C °F	1 2
Dew point	Td	°C °F	52 53
Frost point	Tf	°C °F	65 66
Mixing ratio	r	g/kg gr/lb	60 61
Absolute humidity	dv	g/m^3 gr/ft^3	56 57
Wet bulb temperature	Tw	°C °F	54 55
Water vapour partial pressure	e	mbar psi	50 51
Specific enthalpy	h	kJ/kg BTU/lb	62 64

PLEASE NOTE

No mix of SI/US units allowed.

Order Example

EE310-AP1T5E6J3C1GA3GB3SBL-40SBH180

Feature	Code	Description
Approval	AP1	UL listing cULus QUYX.E500367
Type	T5	Remote probe up to 180 °C (356 °F)
Filter	No code	Stainless steel sintered
Probe cable length	No code	2 m (6.6")
Probe length	No code	200 mm (7.87")
Electrical connection	E6	2 x plugs for power supply + outputs and for RS485
Optional features	J3 C1	RS485 module - Modbus RTU E+E proprietary coating
Output 1 measurand	No code	Relative humidity RH [%]
Output 1 signal	GA3	0 - 10 V
Output 1 scaling low	No code	0
Output 1 scaling high	No code	100
Output 2 measurand	No code	Temperature T [°C]
Output 2 signal	GB3	0 - 10 V
Output 2 scaling low	SBL-40	-40
Output 2 scaling high	SBH180	180

Accessories

For further information see datasheet Accessories.

Description	Code
Mounting flange stainless steel	**HA010201**
Drip water protection	**HA010503**
Bracket for DIN rail mounting[1)]	**HA010203**
Humidity calibration kit	**See data sheet** Humidity Calibration Kit
Stainless steel wall mounting clip Ø12 mm (0.5")	**HA010225**

1) Two pieces are necessary for each EE310.

Company Headquarters &
Production Site

E+E Elektronik Ges.m.b.H.
Langwiesen 7
4209 Engerwitzdorf | Austria
T +43 7235 605-0
F +43 7235 605-8
info@epluse.com
www.epluse.com

Subsidiaries

E+E Sensor Technology (Shanghai) Co., Ltd.
T +86 21 6117 6129
info@epluse.cn

E+E Elektronik France SARL
T +33 4 74 72 35 82
info.fr@epluse.com

E+E Elektronik Deutschland GmbH
T +49 6171 69411-0
info.de@epluse.com

E+E Elektronik India Private Limited
T +91 990 440 5400
info.in@epluse.com

E+E Elektronik Italia S.R.L.
T +39 02 2707 86 36
info.it@epluse.com

E+E Korea Co., Ltd.
T +82 31 732 6050
info.kr@epluse.com

E+E Elektronik Corporation
T +1 847 490 0520
info.us@epluse.com

E+E

your partner
in sensor
technology.

Version v1.2 | 06-2023

www.epluse.com